GISA: a Brazilian Platform for Autonomous Cars Trials

André C. Hernandes, André S. Brito, Henry Roncancio
Daniel V. Magalhães, Marcelo Becker and Rafael C. B. Sampaio
University of São Paulo/EESC/Mobile Robotics/SENA project
São Carlos/SP, Brazil - 13560-915
Email: andre.hernandes@usp.br, erdan20@gmail.com
roncanciovl@hotmail.com, dvarela133@gmail.com, becker@sc.usp.br

Björn T. Jensen
Bern University of Applied Sciences
Bern, Switzerland
Quellgasse 21
CH-2501 Biel/Bienne
Email: bjoern.jensen@bfh.ch

***Abstract*—According to WHO, traffic safety is one of the major concerns of this decade. Due to this, researchers worldwide aim to reduce the large number of fatalities in traffic accidents. This paper presents GISA as a contribution to this scenario. It consists of a platform for testing autonomous car algorithms. Firstly, some requisites to build an autonomous vehicle are presented, followed by sensors, their placement and ROS middleware. Some tests are presented to check the platform performance, including localization issues and obstacle detection. Results show that GISA is a consistent platform for implementation of autonomous car algorithms.**

I. Introduction

According to WHO (World Health Organization), traffic accidents are the ninth on the rank of the most deadly causes and they are being considered a world epidemy [1]. Due to this, the United Nations has named this decade of 2010-2020, the decade of traffic accidents prevention [2]. Notably, among all the causes for traffic fatalities, there are ones caused mainly by human factors. Among them, speeding and alcohol ingestion are pointed out as the principal reasons to car accidents [3].

Mobile Robotics contemplates this scenario and proposes a number of solutions to create safer environments. This issue was firstly addressed in 2006/2007 with M-ELROB (Military European Land Robot Trial) and DARPA Urban Challenge competitions [4][5]. Leading companies, such as FORD, GM have turned their attention to the safety issue and invested in assisting technology [6][7]. Aiming to either support or facilitate passenger's mobility, many successful projects are brought to the stage of robotics research.

Google's and VisLab's Cars are some examples of successful research projects [8][9]. They were first presented to the world in 2010. The former has already collected a data log of 140,000 miles driven in the streets of Pasadena, California practically free of collisions. The latter went on a 3-month trip between Italy and China. The leading car made GPS waypoints for its following autonomous car. Both of these projects addressed 3 major and fundamental requisites for a car to drive itself autonomously: localization, path planning and collision avoidance.

To accomplish these, the criteria regarding the use of sensors play a major role. Accuracy, noise robustness, and reliability narrow down the options of choice. In the case of Google's car, it was equipped with a 3D-LIDAR (Light Detection And Ranging) HDL-64E Velodyne, GPS receivers, Inertial units, cameras and radars. VisLab's car has a simpler platform containing stereo cameras, GPS receivers, Inertial Units and LIDAR sensors. All these sensors can be fit in 2 classes. One contributes to locate the vehicle in a specific scenario. The other contributes to map the environment outside the car.

This paper aims to present a consistent platform to assist algorithm development and implementation used in autonomous vehicles. Section II presents GISA's platform, showing its sensors, their placement and the middleware used. Section III shows some simplistic but essential tests to validate the platform performance and finally, in section IV, a conclusion is presented.

II. Autonomous Car Domain

Due to its innate characteristic of perceiving their surroundings, sensors play a substantial role on autonomous Robotics. They differ widely, considering their measure, size, function, and purpose. Some sensors are active, that is, they act in the environment to map it and identify specific data, e.g. LIDAR (Light Detection And Ranging) sensor. On the other hand, the passive ones, such as the cameras, only collect data indiscriminately.

For an autonomous car, such as GISA's platform, specific sensors are needed so all the requisites for autonomous driving are fulfilled. As briefly mentioned in section I, 3 requisites are needed to make an autonomous car. The localization requisite addresses the issue of positioning a vehicle in a constrained environment such as a city. When the robot has nonholonomic movements, e.g. cars, and the environment is crowded with obstacles, path planning is a compulsory requisite. At last but not least, collision avoidance is a criterion that addresses traffic safety itself. It sums up with the path planning so a vehicle can be driven safely in the city.

A. Autonomous cars requisites

A specific set of sensors tackle these requisites. For the localization issue, a GPS (Global Positioning System) receiver

978-1-4673-4569-9/13/$31.00 ©2013 IEEE

is needed. Moreover, its fusion with an IMU (Inertial Measurement Unit) is required to enhance the localization accuracy and keep errors low even in harsh scenarios. Tunnels, for instance, represent one of the major problems regarding localization since satellites signals cannot pass through land and tunnels structures, which keeps the car's GPS receivers in the dark.

For obstacle detection, overall awareness is needed. In that sense, a sensor or a group of sensors which collect 360° data is required. For instance, LIDARs are active sensors. Due to this, they are invariant to illumination and contrast issues, which means they are able to detect objects even without external illumination. Also, their measure are target independent in contrast with radar sensors. That way, only one LIDAR is needed to detect more than one class of objects. Nevertheless, their range may be seen as a drawback since it limits their application to autonomous cars. Indeed, in highway scenarios ranges of 200 meters are required to take safe decisions.

Traffic scenarios are complex environments and their intrinsic characteristics may sometimes only be spotted by cameras. They are essential for autonomous cars once they can determine the free road for navigation, its shape and both vertical and horizontal signalization. Fusing this information with the one available in maps, trajectories can be designed based on the car's dynamics. Despite their innate illumination problem, vision systems offer relevant information to autonomous navigation.

Once the sensor criteria had been analyzed, one can choose the sensors specifications as shown in section II-B.

B. GISA's Sensors

GISA's platform covers all the sensors needed for a functional autonomous car. At first, we evaluate each sensor performance along with its perception algorithm aiming a more reliable, robust and cheaper solution. The following sensors belong to the tested platform that will be used for future comparisons.

1) GPS Module: GISA has a Septentrio AsteRx2eH GPS receiver as one can see in figure 1. It consists of a GPS module that has a standalone horizontal accuracy of $1.3m$.

(a)

(b)

Fig. 1. (a) Septentrio AsteRx2eH GPS receiver. (b) Antennas Displacement on GISA.

However, with DGPS (Differential Global Positioning System) the accuracy reaches $0.5m$. At GISA's platform, the distance between the antennas is almost 1 meter length. Thus the heading accuracy is 0.3^o. Moreover, AsteRx2eH module has an advantage. It offers the possibility of using RTK (Real-Time Kinematics) mode signal processing. RTK uses a real-time channel to resolve ambiguity equations while the car is moving. Thus, in this mode, the accuracy is as high as $6mm$.

AsteRx2eH can acquire data at a maximum frequency of 20 Hz. Additionally, the output of the module is the geodetic position (latitude, longitude and altitude), the vehicle's heading and the car estimated velocity summing up less than 1 $kBps$ [10].

2) IMU Module: Another approach for localization issues is the use of an IMU. GISA has a SbgIG-500N IMU as shown in figure 2.

(a)

(b)

Fig. 2. (a) SbgIG-500N IMU. (b) IMU displacement on GISA.

The IMU has angular accuracy of $1^o/s$ and linear accuracy of $4m\vec{g}$. Nevertheless, Sbg IG-500N has a Kalman Filter internally implemented that drops errors near zero after the filter stabilization. The output update rate from this module is up to 100Hz. Moreover, Sbg IG-500N has an input for GPS antennas. Consequently, a fusion with this complementary data can be made inside Sbg [11].

3) Camera Module: When it comes to obstacle detection issues, a camera module is used to ease this kind of task. GISA's platform has an AVT Stingray F-033C as illustrated in figure 3.

(a)

(b)

Fig. 3. (a) AVT Stingray F-033C. (b) Camera displacement on GISA.

AVT Stingray F-033C outputs a RGB image at maximum 60 fps and its size is 656 x 492 pixels. The camera communication is firewire based. AVT Stingray has built-in functions such as auto gain control, auto exposure control, trigger control and ROI (Region Of Interest) selection. These functionalities make the camera more versatile and robust when it is facing outdoor environments. In addition, AVT Stingray has a programmable look-up table, which can be used to embed other functions such as color space conversion. Concerning the amount of

data generated at full transfer rate, it is possible to get near 55 $MBps$. Hence, image storage needs to be managed for long drive tests [12].

4) LIDAR Module: Along with the camera module, LIDARs can also detect obstacle information. GISA's Platform has two types of LIDAR sensors: ibeo LUX and HDL 32E Velodyne. Figures 4 and 5 show them and their position in the car.

(a) (b)

Fig. 4. (a) Ibeo LUX. (b) ibeo displacement on GISA.

(a) (b)

Fig. 5. (a) HDL 32E Velodyne. (b) Velodyne displacement on GISA.

Ibeo LUX sensor has a field of view of 85° ($+35^o$ to -50°), a 4-layer scanner and its vertical field of view is 3.2^o (-1.6^o to $+1.6^o$). Ibeo LUX detects obstacles at most 200 meters at 0° and can output its data at up to $50Hz$ with a 0.5^o angular resolution and 0.04 meters as distance resolution. Moreover, ibeo LUX can communicate with the car's CAN-bus and use the network information along with its own data [13].

HDL-32E Velodyne has a horizontal field of view of 360° and uses its 32 layers to achieve a vertical field of view of 41.3^o (-30.65^o to $+10.65^o$). HDL-32E spins at $10Hz$ collecting data and measuring obstacles up to 100 meters with 2-cm accuracy. The major concern for Velodyne is the amount of data generated. The point cloud according to Cartesian coordinates has 16 $MBps$. For LIDAR sensors, that is a considerable amount of data that needs sound strategies to handle these points but also to store them [14].

C. Platform Display

Considering the selected sensors and with safety in mind, GISA's platform display was made as shown in figure 6.

The sensors placement was planned according to their specifications. We considered the sensor's range, function and purposes. For localization, the IMU was placed near the car's gravity center. This way, the linear and angular acceleration measures could be considered as the observable state of the car's dynamic model.

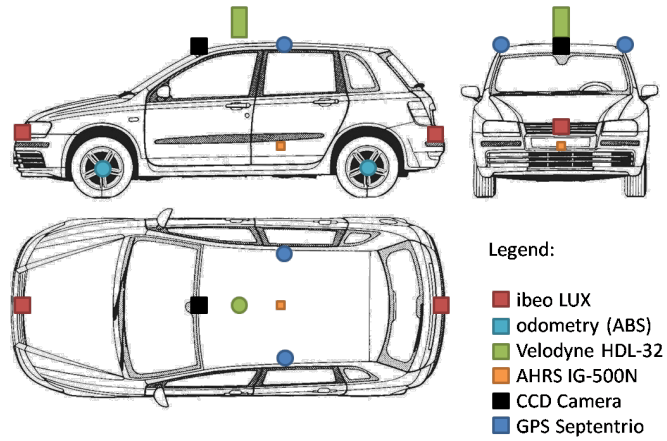

Fig. 6. Views of GISA's Platform Display.

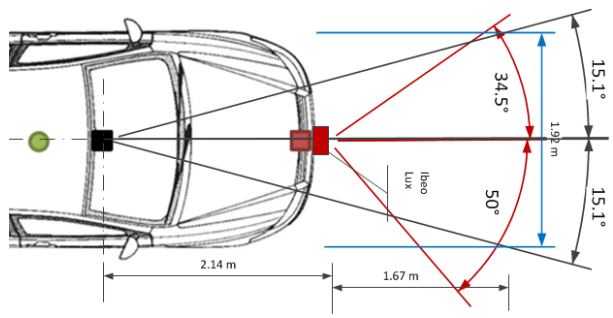

Fig. 7. Overlapped region in front of GISA.

The GPS antennas were placed at GISA's top whose distance were maximized to increase accuracy for heading direction estimations in DGPS mode.

At last, sensors responsible for capturing environment data were placed so that redundant regions could be spotted. These regions were chosen during the design process, aiming to increase safety for passengers and other traffic participants. In that sense, the area in front of the vehicle was considered as the most critical one, and it can be mapped by 3 different sensors. Figure 7 illustrates the overlapped region.

Both side areas along the vehicle were sensed by Velodyne at the top of GISA. These regions were considered less critical due to car's nonholonomic dynamics. Additionally, obstacle-tracking algorithms can use information about these regions to maintain their assertion about the obstacle positions. These obstacles may be firstly detected by sensor in other areas such as the front of GISA.

The information about critical and non-critical regions were addressed. In order to do so, a computer network is needed not only to accomplish handling the amount of data but also to deal with the time requisite for a critical system such as an autonomous car. Therefore, software architecture is essential and ROS(Robotic Operation System) is the one in GISA's platform.

Fig. 8. GISA's path at Campus 1- USP São Carlos at $1HZ$.

Fig. 9. GISA's path at Campus 1- USP São Carlos at $20Hz$.

Fig. 10. GISA's path at campus 2 - USP São Carlos

D. Platform Middleware

ROS is an open-source middleware that provides an abstraction layer between computation and embodiment. ROS uses a graph based process handler. Therefore, each individual process has its own node and it can be in the same ROS master computer or inside others. ROS framework message passing is based on topic publish/subscribe methods which allows process to run independently. In that sense, ROS has the required software architecture for autonomous cars. Although this framework is not a real-time one, there are some researchers aiming to integrate real-time modules in ROS [15].

III. Validation Tests

Some tests were carried out to validate the proposed platform. Despite of being simplistic, these tests are essential to assess the platform performance. These carried out trials were based on the 3 essentials requisites for autonomous cars.

A. GPS Localization

The first trial used Septentrio GPS on its DGPS mode. Therefore, the left antenna was chosen to be the base and the right one to be the rover. As mentioned before, the 1-meter separation of the antennas leads to a heading accuracy of 0.3^o and position accuracy of $0.5m$. It is the borderline acceptable standard deviation for autonomous cars positioning. Although its acquisition rate can go as fast as $20Hz$, this first trial was made at $1Hz$.

The scenario chosen for this test was the campus 1 of USP (University of São Paulo) São Carlos and a simple route was taken as shown in figure 8.

As one can see, the path made was consistent with the performed trajectory. Nevertheless, small errors can be found where the poor update rate and a partial occlusion from satellites signals occurred. To rule out the update problem, another trial was made at full acquisition frequency as illustrated by figure 9

1) Preliminary Results: The final step for these trial outs was chosen to be at campus 2 of USP São Carlos. The update rate was set at $20Hz$ and a small path was taken as shown in figure 10

A sharp distinction between road lanes by using only DGPS signals for localization may be noted. Despite the high precision, few mistakes occurred. Small bias towards the rightmost side of the lane and small fluctuations in relation to the detected position also happened. These small errors can be completely overcome using Extended Kalman Filter with an IMU, such as SBG IG-500N. Real-time channel for RTK mode on the GPS receiver may also be considered here.

B. Road Detection

To identify the path where GISA must travel, computer vision was used to retrieve road information. At this point, a simple algorithm based on HSV (Hue- Saturation - Value) color space and region descriptors was implemented.

At first, images from the camera passed through a color space conversion from RGB to HSV. The resulting image had a component named Value (V), which contained almost all the illumination of the RGB scene. Secondly, a HS-space was made so that it was illumination invariant. After that, a ROI was placed in front of the car. This small region was defined as drivable area [16] and random seeds were placed in it. From those seeds, a region growth algorithm was used to find similar pixels of road defined by ROI.

1) Preliminary Results: Figures 11 and 12 show the results from tests conducted at campus 2 of USP São Carlos.

As one can see, the basic road geometry can be detected and distinguished. Nevertheless, a better approach must be taken aiming robustness. Despite the positive results, there were slightly wrong ones, as illustrated in figure 13. A possible

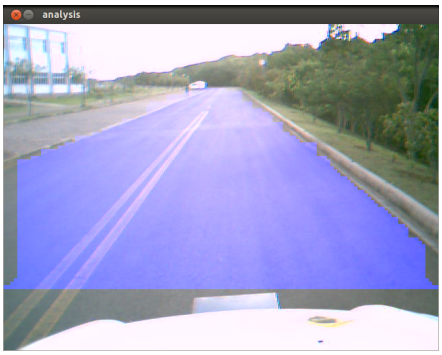

Fig. 11. Straight Lane detection at campus 2 - USP São Carlos

Fig. 12. Left Turn Detection at campus 2 - USP São Carlos

solution to contain the region overflow is to detect the road boundaries.

C. Obstacle Detection

Along with path detection, the obstacle recognition must be carried out so the autonomous car can drive safely. With this is mind, Velodyne was chosen to be tested since it generates an amount of data bigger than ibeo LUX. A simplistic, but efficient approach was taken to find obstacles for the vehicle in the Velodyne's frame.

Firstly, the point cloud was published at *velodyne_points*, then the obstacle detection was subscribed to that topic and segmentation followed based on heights of interest as illustrated in figures 14 and 15.

Fig. 13. Wrong detection made by Region Growth algorithm

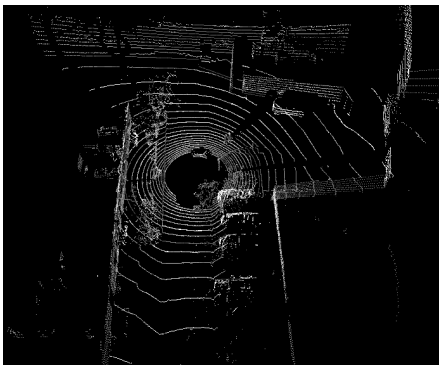

Fig. 14. Raw point clould from HDL 32e velodyne

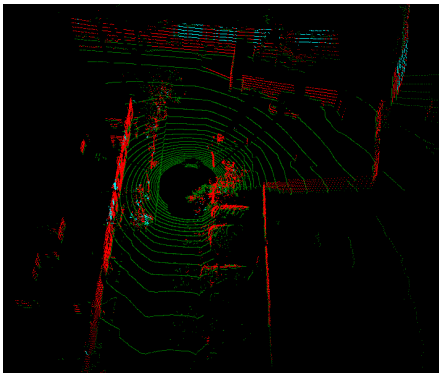

Fig. 15. Classified points for obstacle detection

D. Pedestrian Detection

One major concern for autonomous cars is pedestrian detection as they are the most vulnerable traffic participants. To accomplish the pedestrian recognition the following steps were taken [17]:

- Image normalization.
- Extraction of descriptors using Histogram of Oriented Gradients (HOG).
- Use the descriptors as input in a tuned Support Vector Machine (SVM).

The image normalization aims to resize an image in order to make the pedestrian appears in most of it. For this reason, a LIDAR and camera fusion was proposed. LIDAR sensors sent the information of a pedestrian at LIDAR's coordinate frame to the camera image handler. This piece of information was transformed into the camera's coordinate frame and the camera image handler could normalize the pedestrian at the image frame.

At this point, the normalized image passed through a description extraction process using HOG, this human-shape descriptor created by [18] is invariant to local geometric and photometric transformations in pedestrian imagery. The HOG is widely used in pedestrian recognition because it presents a better performance when compared with other descriptors [19]. This algorithm extracts local features from the image by calculating the distribution of local intensity gradients or edge

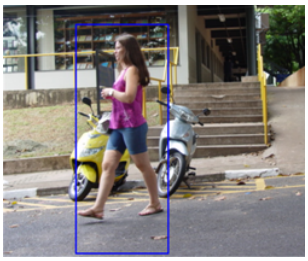

Fig. 16. Pedestrian detection using a tuned SVM and emulating the LIDAR segmentation

directions. It also carries out local contrast normalization. In the present implementation, the resulting descriptor for any image size was a vector $\mathbb{R}^{81}$ [20]. The descriptor has the class attributes or features that would be subsequently used in the Tuned SVM.

An SVM is an algorithm that makes predictions on new data by comparing them with a model made from known data (training data). Basically, SVM performs a mathematical optimization to best separate the classes. As a result, the best separation hyperplane(hypothesis) is determined. In some classification problems, the relation between class labels and features is predominantly non-linear. Therefore, an especial non-linear function is used to map the examples to a higher dimension in order to achieve easier separation. The function that defines how the examples are mapped is known as "kernel" and it can be either linear or non-linear. The approach used in this work was named tuned SVM due to its training processes whose steps aimed the optimization of the inner model parameters [17].

1) Preliminary Results: The preliminary test emulated the LIDAR segmentation of an image. Its correlation with the camera was previously calculated. After that, an object was localized at the camera frame. A search window was chosen according to the center of the object that was previously determined. We considered that the width of the search window was twice the object width and its height of $2.5m$ at the LIDAR frame. The Tuned SVM shown at [17] with parameters $\sigma = 4.2$ and $C = 11.4$ was tested and its resulting detection can be spotted in figure 16.

Although it is not a complete accurate result, the figure 16 shows the efficiency of the Tuned SVM for normalized images. The complete fusion between LIDAR sensor and camera is a work in progress at LabRoM - USP - São Carlos [17].

IV. Conclusions and Future Works

GISA is a valid platform for testing autonomous car algorithms as shown by the trials explained through this paper. For future works, Extended Kalman Filter fusion of GPS and IMU will be implemented. Additionally, more robust obstacle and lane geometry detection will be carried out. Finally, ibeo LUX and AVT camera must be integrated to detect pedestrians.

Acknowledgment

The authors would like to thank CAPES, CePoF-INOF, CNPq, FAPESP, FIAT, Maxon Motors, National Instruments, SHELL and Treffer Tecnologias for their support to this work.

References

[1] W. H. O., "Global status report on road safety: time for action," World Health Organization, Tech. Rep., 2009. [Online]. Available: http://www.who.int/violence_injury_prevention/road_safety_status/2009

[2] ——, "Decade of action for road safety 2011-2020 - global launch," World Health Organization, Tech. Rep., 2011. [Online]. Available: http://www.who.int/roadsafety/publications/global_launch.pdf

[3] N. H. T. S. A., "2009 traffic safety facts fars/ges annual report (final edition)," National Center for Statistics and Analysis - U.S. Department of Transportation, Washington, DC, Annual Report 811402, 2011. [Online]. Available: http://www-nrd.nhtsa.dot.gov/Pubs/811402.pdf

[4] P. Lamon, S. Kolski, R. Triebel, W. Burgard, and K. M. A. epfl (navigation, "The smartter for elrob 2006 - a vehicle for fully autonomous navigation and mapping in outdoor environments," 2006. [Online]. Available: http://citeseerx.ist.psu.edu/viewdoc/download?doi=10.1.1.83.4081&rep=rep1&type=pdf

[5] M. Montemerlo, J. Becker, S. Bhat, H. Dahlkamp, D. Dolgov, S. Ettinger, D. Haehnel, T. Hilden, G. Hoffmann, B. Huhnke, D. Johnston, S. Klumpp, D. Langer, A. Levandowski, J. Levinson, J. Marcil, D. Orenstein, J. Paefgen, I. Penny, A. Petrovskaya, M. Pflueger, G. Stanek, D. Stavens, A. Vogt, and S. Thrun, "Junior: The stanford entry in the urban challenge," *Journal of Field Robotics*, 2008. [Online]. Available: http://robots.stanford.edu/papers/junior08.pdf

[6] K. Kowalenko, "Keeping cars from crashing," *the Institute*, Sep 2010. [Online]. Available: http://theinstitute.ieee.org/technology-focus/technology-topic/keeping-cars-from-crashing725

[7] (2011) Fordlane keeping system helps fusion drivers stay alert and between the lines. Ford Motor Company. [Online]. Available: http://media.ford.com/article_display.cfm?article_id=35776

[8] E. ACKERMAN. (2010) Google's autonomous car takes to the streets. [Online]. Available: http://spectrum.ieee.org/automaton/robotics/artificial-intelligence/googles-autonomous-car-takes-to-the-streets

[9] M. Bertozzi, A. Broggi, E. Cardarelli, R. I. Fedriga, L. Mazzei, and P. P. Porta, "Viac expedition toward autonomous mobility," *Robotics and Automation Magazine*, vol. 18, no. 3, pp. 120–124, Sep 2011, iSSN: 1070-9932. [Online]. Available: http://www.ce.unipr.it/people/bertozzi/pap/cr/jras2011.pdf

[10] *AsteRx2 Product Family Hardware Manual*, Spetentrio, 2010.

[11] *IG-500N GPS aided AHRS User Manual*, Sbg Systems, 2009.

[12] *AVT Stingray Techinical Manual*, Allied Vision Technologies, 2012.

[13] *Ibeo LUX Operating Manual*, Ibeo, 2010.

[14] *HDL-32E - User's manual and programming guide*, Velodyne LiDAR, Morgan Hill, CA, 2011.

[15] Documetation - ros wiki. ROS.org. [Online]. Available: http://www.ros.org/wiki/

[16] S. Thrun, M. Montemerlo, H. Dahlkamp, D. Stavens, A. Aron, J. Diebel, P. Fong, J. Gale, M. Halpenny, G. Hoffmann, K. Lau, C. Oakley, M. Palatucci, V. Pratt, P. Stang, S. Strohband, C. Dupont, L.-E. Jendrossek, C. Koelen, C. Markey, C. Rummel, J. van Niekerk, E. Jensen, P. Alessandrini, G. Bradski, B. Davies, S. Ettinger, A. Kaehler, A. Nefian, and P. Mahoney, "Winning the darpa grand challenge," *Journal of Field Robotics*, 2006.

[17] H. Roncancio, A. C. Hernandes, and M. Becker, "Vision-based system for pedestrian recognition using a tuned svm classifier," *Proceedings of the 2012 IEEE Workshop on Engineering Applications*, pp. 2–4, May 2012.

[18] N. Dalal and B. Triggs, "Histograms of oriented gradients for human detection," *Computer Vision and Pattern Recognition, 2005*, vol. 1, p. 886893, 2005. [Online]. Available: http://ieeexplore.ieee.org/xpls/abs_all.jsp?arnumber=1467360

[19] M. Enzweiler and D. M. Gavrila, "Monocular pedestrian detection: survey and experiments," *IEEE transactions on pattern analysis and machine intelligence*, vol. 31, no. 12, p. 217995, Dec 2009. [Online]. Available: http://www.ncbi.nlm.nih.gov/pubmed/19834140

[20] O. Ludwig, D, Delgado, V. Gonalves, , and U. Nunes, "Trainable classifier-fusion schemes: an application to pedestrian detection," *Intelligent Transportation Systems, 2009*, p. 16, 2009. [Online]. Available: http://ieeexplore.ieee.org/xpls/abs_all.jsp?arnumber=5309700